8170 Straight Square
Entrance Pull Handles

dormakaba's straight square entrance pull handles epitomize the high quality ambitions of the dormakaba brand – designed for excellence down to the very last detail and exuding fine craftsmanship.
They offer genuine quality, characterised by clearly defined features – irrespective of shape or size.

Created in solid, premium 316 Marine Grade Stainless Steel offering superior corrosion resistance for internal and external use in high traffic buildings. The round section allows comfortable ease of use.

The 8170 entrance pull handles are an ideal choice for residential and commercial applications and are suitable for use on glass, timber and aluminium doors.

Please refer to ordering details for a range of optional accessories to suit:

- Back to back extended fixing for timber doors
- Back to back fixing for glass doors
- Disc fixing for timber doors
- Disc fixing for glass doors

Features at a glance:

- 316 Marine Grade Stainless Steel
- Designed with your project's needs in mind
- High durability with concealed fixings
- Standard finishes: SSS and PSS
- Powdercoat and custom finishes available on request

dormakaba Australia
Head Office
12-13 Dansu Court
Hallam VIC 3803
T: 1800 675 411
info.au@dormakaba.com
www.dormakaba.com.au

dormakaba New Zealand
Head Office
Building P, 61-69 Patiki Road
Avondale, Auckland 1026
T: 0800 436 762
info.nz@dormakaba.com
www.dormakaba.co.nz

Fixing options

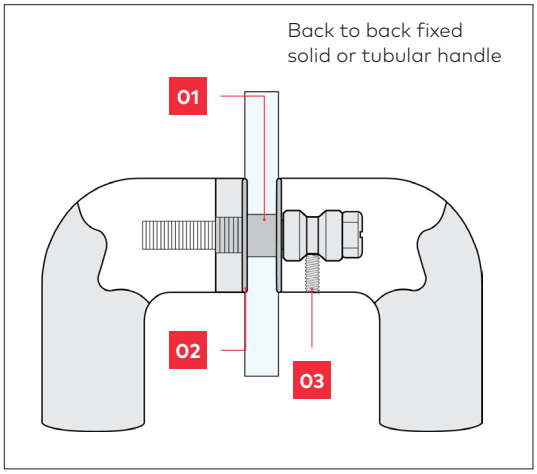

GD FIX - glass doors

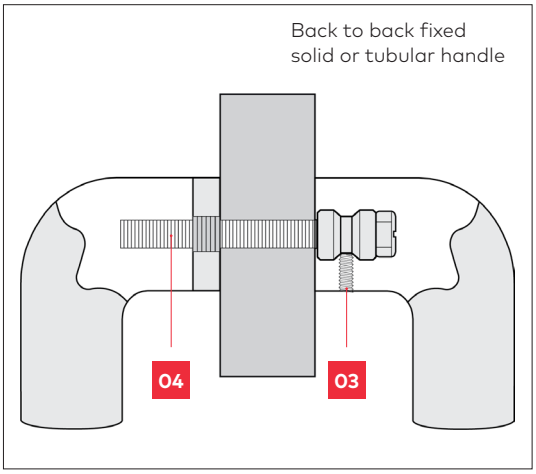

TM FIX - timber or metal doors

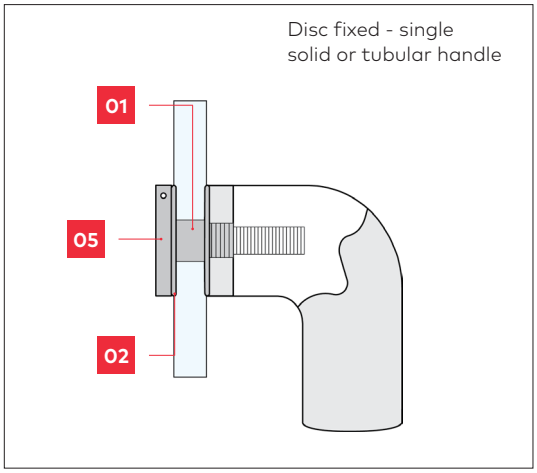

D FIX - glass, metal or timber doors

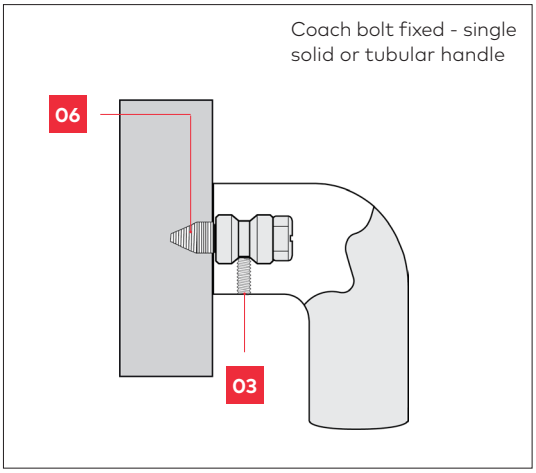

C FIX - timber doors only

TIMBER DOOR FIXING

Material Size	Bolt Size
14mm Ø	5mm
16mm Ø	5mm
19mm Ø	8mm
25mm Ø	8mm
32mm Ø	8mm

METAL DOOR FIXING

Material Size	Bolt Size
14mm Ø	5mm
16mm Ø	5mm
19mm Ø	8mm
25mm Ø	8mm
32mm Ø	8mm

GLASS DOOR FIXING

Material Size	Bolt Size
14mm Ø	12mm Ø
16mm Ø	12mm Ø
19mm Ø	12mm Ø
25mm Ø	12mm Ø
32mm Ø	12mm Ø

Note
Nylon spacers and washers are included with handle for glass door fixing option.

Legend
01 Spacer
02 Washer
03 Grub Screw
04 Bolt
05 Disc
06 Coach Bolt

Ordering details

Item	Article Number	Description	Square Tube	Length	Fixing Centers	Projection
BACK TO BACK FIXING						
B8170/400/19/PSS	9458173533102	B8170/400/19 OA 419 CTC 400 PSS	19mm	419mm	400mm	65mm
B8170/400/19/SSS	9458173533101	B8170/400/19 OA 419 CTC 400 SSS	19mm	419mm	400mm	65mm
B8170/400/25/PSS	9458173534102	B8170/400/25 OA 425 CTC 400 PSS	25mm	419mm	400mm	70mm
B8170/400/25/SSS	9458173534101	B8170/400/25 OA 425 CTC 400 SSS	25mm	419mm	400mm	70mm
B8170/400/32/PSS	9458173535102	B8170/400/32 OA 432 CTC 400 PSS	32mm	419mm	400mm	77mm
B8170/400/32/SSS	9458173535101	B8170/400/32 OA 432 CTC 400 SSS	32mm	419mm	400mm	77mm
B8170/600/19/PSS	9458174733102	B8170/600/19 OA 619 CTC 600 PSS	19mm	619mm	600mm	65mm
B8170/600/19/SSS	9458174733101	B8170/600/19 OA 619 CTC 600 SSS	19mm	619mm	600mm	65mm
B8170/600/25/PSS	9458174734102	B8170/600/25 OA 625 CTC 600 PSS	25mm	619mm	600mm	70mm
B8170/600/25/SSS	9458174734101	B8170/600/25 OA 625 CTC 600 SSS	25mm	619mm	600mm	70mm
B8170/600/32/PSS	9458174735102	B8170/600/32 OA 632 CTC 600 PSS	32mm	619mm	600mm	77mm
B8170/600/32/SSS	9458174735101	B8170/600/32 OA 632 CTC 600 SSS	32mm	619mm	600mm	77mm
B8170/800/19/PSS	9458175813102	B8170/800/19 OA 819 CTC 800 PSS	19mm	819mm	800mm	65mm
B8170/800/19/SSS	9458175813101	B8170/800/19 OA 819 CTC 800 SSS	19mm	819mm	800mm	65mm
B8170/800/25/PSS	9458175814102	B8170/800/25 OA 825 CTC 800 PSS	25mm	819mm	800mm	70mm
B8170/800/25/SSS	9458175814101	B8170/800/25 OA 825 CTC 800 SSS	25mm	819mm	800mm	70mm
B8170/800/32/PSS	9458175815102	B8170/800/32 OA 832 CTC 800 PSS	32mm	819mm	800mm	77mm
B8170/800/32/SSS	9458175815101	B8170/800/32 OA 832 CTC 800 SSS	32mm	819mm	800mm	77mm
B8170/1000/19/PSS	9458176653102	B8170/1000/19 OA 1019 CTC 1000 PSS	19mm	1019mm	1000mm	65mm
B8170/1000/19/SSS	9458176653101	B8170/1000/19 OA 1019 CTC 1000 SSS	19mm	1019mm	1000mm	65mm
B8170/1000/25/PSS	9458176654102	B8170/1000/25 OA 1025 CTC 1000 PSS	25mm	1019mm	1000mm	70mm
B8170/1000/25/SSS	9458176654101	B8170/1000/25 OA 1025 CTC 1000 SSS	25mm	1019mm	1000mm	70mm
B8170/1000/32/PSS	9458176655102	B8170/1000/32 OA 1032 CTC 1000 PSS	32mm	1019mm	1000mm	77mm
B8170/1000/32/SSS	9458176655101	B8170/1000/32 OA 1032 CTC 1000 SSS	32mm	1019mm	1000mm	77mm
B8170/1500/19/PSS	9458178393102	B8170/1500/19 OA 1519 CTC 1500 PSS	19mm	1519mm	1500mm	65mm
B8170/1500/19/SSS	9458178393101	B8170/1500/19 OA 1519 CTC 1500 SSS	19mm	1519mm	1500mm	65mm
B8170/1500/25/PSS	9458178394102	B8170/1500/25 OA 1525 CTC 1500 PSS	25mm	1519mm	1500mm	70mm
B8170/1500/25/SSS	9458178394101	B8170/1500/25 OA 1525 CTC 1500 SSS	25mm	1519mm	1500mm	70mm
B8170/1500/32/PSS	9458178395102	B8170/1500/32 OA 1532 CTC 1500 PSS	32mm	1519mm	1500mm	77mm
B8170/1500/32/SSS	9458178395101	B8170/1500/32 OA 1532 CTC 1500 SSS	32mm	1519mm	1500mm	77mm

ACCESSORIES - EXTENDED FIXINGS - sold as a pair

TM/M8/50	9459508058200	M8/50 FERULE HEAD BOLT TM FIX
TM/M8/75	9459758078200	M8/75 FERULE HEAD BOLT TM FIX
TM/M8/90	9400000012887	M8/90 BOLT & 16MM FERULE TM FIX
TM/M8/100	9400000012888	M8/100 BOLT & 16MM FERULE TM FIX
TM/M8/110	9459118118200	M8/110 BOLT & 16MM FERULE TM FIX
TM/M8/120	9459128128200	M8/120 BOLT & 16MM FERULE TM FIX
TM/M8/130	9459138138200	M8/130 BOLT & 16MM FERULE TM FIX
TM/M8/150	9459158158200	M8/150 BOLT & 16MM FERULE TM FIX

Note: When ordering extended fixings please use the below formula.

Door thickness + 20mm for the Ferule + 10mm in to the other handle = round up to the nearest size offered.

Ordering details

Item	Article Number	Description	Square Tube	Length	Fixing Centers	Projection
ACCESSORIES - GLASS FIXINGS - sold as a pair						
GF19/M8/50 SQU	9459501988302	19 DIA SQU GLASS FIXING PAIRS				
GF25/M8/50 SQU	9459502588302	25 DIA SQU GLASS FIXING PAIRS				
GF32/M8/50 SQU	9459503288302	32 DIA SQU GLASS FIXING PAIRS				
CONCEALED FIXING						
C8170/400/19/PSS	9458173533202	C8170/400/19 OA 419 CTC 400 PSS	25mm	419mm	400mm	70mm
C8170/400/19/SSS	9458173533201	C8170/400/19 OA 419 CTC 400 SSS	25mm	419mm	400mm	70mm
C8170/400/25/PSS	9458173534202	C8170/400/25 OA 425 CTC 400 PSS	32mm	419mm	400mm	77mm
C8170/400/25/SSS	9458173534201	C8170/400/25 OA 425 CTC 400 SSS	32mm	419mm	400mm	77mm
C8170/400/32/PSS	9458173535202	C8170/400/32 OA 432 CTC 400 PSS	19mm	619mm	600mm	65mm
C8170/400/32/SSS	9458173535201	C8170/400/32 OA 432 CTC 400 SSS	19mm	619mm	600mm	65mm
C8170/600/19/PSS	9458174733202	C8170/600/19 OA 619 CTC 600 PSS	25mm	619mm	600mm	70mm
C8170/600/19/SSS	9458174733201	C8170/600/19 OA 619 CTC 600 SSS	25mm	619mm	600mm	70mm
C8170/600/25/PSS	9458174734202	C8170/600/25 OA 625 CTC 600 PSS	32mm	619mm	600mm	77mm
C8170/600/25/SSS	9458174734201	C8170/600/25 OA 625 CTC 600 SSS	32mm	619mm	600mm	77mm
C8170/600/32/PSS	9458174735202	C8170/600/32 OA 632 CTC 600 PSS	19mm	819mm	800mm	65mm
C8170/600/32/SSS	9458174735201	C8170/600/32 OA 632 CTC 600 SSS	19mm	819mm	800mm	65mm
C8170/800/19/PSS	9458175813202	C8170/800/19 OA 819 CTC 800 PSS	25mm	819mm	800mm	70mm
C8170/800/19/SSS	9458175813201	C8170/800/19 OA 819 CTC 800 SSS	25mm	819mm	800mm	70mm
C8170/800/25/PSS	9458175814202	C8170/800/25 OA 825 CTC 800 PSS	32mm	819mm	800mm	77mm
C8170/800/25/SSS	9458175814201	C8170/800/25 OA 825 CTC 800 SSS	32mm	819mm	800mm	77mm
C8170/800/32/PSS	9458175815202	C8170/800/32 OA 832 CTC 800 PSS	19mm	1019mm	1000mm	65mm
C8170/800/32/SSS	9458175815201	C8170/800/32 OA 832 CTC 800 SSS	19mm	1019mm	1000mm	65mm
C8170/1000/19/PSS	9458176653202	C8170/1000/19 OA 1019 CTC 1000 PSS	19mm	1019mm	1000mm	65mm
C8170/1000/19/PSS	9458176653202	C8170/1000/19 OA 1019 CTC 1000 PSS	25mm	1019mm	1000mm	70mm
C8170/1000/19/SSS	9458176653201	C8170/1000/19 OA 1019 CTC 1000 SSS	19mm	1019mm	1000mm	65mm
C8170/1000/19/SSS	9458176653201	C8170/1000/19 OA 1019 CTC 1000 SSS	25mm	1019mm	1000mm	70mm
C8170/1000/25/PSS	9458176654202	C8170/1000/25 OA 1025 CTC 1000 PSS	32mm	1019mm	1000mm	77mm
C8170/1000/25/SSS	9458176654201	C8170/1000/25 OA 1025 CTC 1000 SSS	32mm	1019mm	1000mm	77mm
C8170/1000/32/PSS	9458176655202	C8170/1000/32 OA 1032 CTC 1000 PSS	19mm	1519mm	1500mm	65mm
C8170/1000/32/SSS	9458176655201	C8170/1000/32 OA 1032 CTC 1000 SSS	19mm	1519mm	1500mm	65mm
C8170/1500/19/PSS	9458178393202	C8170/1500/19 OA 1519 CTC 1500 PSS	25mm	1519mm	1500mm	70mm
C8170/1500/19/SSS	9458178393201	C8170/1500/19 OA 1519 CTC 1500 SSS	25mm	1519mm	1500mm	70mm
C8170/1500/25/PSS	9458178394202	C8170/1500/25 OA 1525 CTC 1500 PSS	32mm	1519mm	1500mm	77mm
C8170/1500/25/SSS	9458178394201	C8170/1500/25 OA 1525 CTC 1500 SSS	32mm	1519mm	1500mm	77mm
C8170/1500/32/PSS	9458178395202	C8170/1500/32 OA 1532 CTC 1500 PSS	19mm	419mm	400mm	65mm
C8170/1500/32/SSS	9458178395201	C8170/1500/32 OA 1532 CTC 1500 SSS	19mm	419mm	400mm	65mm

Ordering details

Item	Article Number	Description	Square Tube	Length	Fixing Centers	Projection
DISC FIXING						
D8170/400/19/PSS	9458173533302	D8170/400/19 OA 419 CTC 400 PSS	19mm	419mm	400mm	65mm
D8170/400/19/SSS	9458173533301	D8170/400/19 OA 419 CTC 400 SSS	19mm	419mm	400mm	65mm
D8170/400/25/PSS	9458173534302	D8170/400/25 OA 425 CTC 400 PSS	25mm	419mm	400mm	70mm
D8170/400/25/SSS	9458173534301	D8170/400/25 OA 425 CTC 400 SSS	25mm	419mm	400mm	70mm
D8170/400/32/PSS	9458173535302	D8170/400/32 OA 432 CTC 400 PSS	32mm	419mm	400mm	77mm
D8170/400/32/SSS	9458173535301	D8170/400/32 OA 432 CTC 400 SSS	32mm	419mm	400mm	77mm
D8170/600/19/PSS	9458174733302	D8170/600/19 OA 619 CTC 600 PSS	19mm	619mm	600mm	65mm
D8170/600/19/SSS	9458174733301	D8170/600/19 OA 619 CTC 600 SSS	19mm	619mm	600mm	65mm
D8170/600/25/PSS	9458174734302	D8170/600/25 OA 625 CTC 600 PSS	25mm	619mm	600mm	70mm
D8170/600/25/SSS	9458174734301	D8170/600/25 OA 625 CTC 600 SSS	25mm	619mm	600mm	70mm
D8170/600/32/PSS	9458174735302	D8170/600/32 OA 632 CTC 600 PSS	32mm	619mm	600mm	77mm
D8170/600/32/SSS	9458174735301	D8170/600/32 OA 632 CTC 600 SSS	32mm	619mm	600mm	77mm
D8170/800/19/PSS	9458175813302	D8170/800/19 OA 819 CTC 800 PSS	19mm	819mm	800mm	65mm
D8170/800/19/SSS	9458175813301	D8170/800/19 OA 819 CTC 800 SSS	19mm	819mm	800mm	65mm
D8170/800/25/PSS	9458175814302	D8170/800/25 OA 825 CTC 800 PSS	25mm	819mm	800mm	70mm
D8170/800/25/SSS	9458175814301	D8170/800/25 OA 825 CTC 800 SSS	25mm	819mm	800mm	70mm
D8170/800/32/PSS	9458175815302	D8170/800/32 OA 832 CTC 800 PSS	32mm	819mm	800mm	77mm
D8170/800/32/SSS	9458175815301	D8170/800/32 OA 832 CTC 800 SSS	32mm	819mm	800mm	77mm
D8170/1000/19/PSS	9458176653302	D8170/1000/19 OA 1019 CTC 1000 PSS	19mm	1019mm	1000mm	65mm
D8170/1000/19/PSS	9458176653302	D8170/1000/19 OA 1019 CTC 1000 PSS	19mm	1019mm	1000mm	65mm
D8170/1000/19/SSS	9458176653301	D8170/1000/19 OA 1019 CTC 1000 SSS	19mm	1019mm	1000mm	65mm
D8170/1000/19/SSS	9458176653301	D8170/1000/19 OA 1019 CTC 1000 SSS	19mm	1019mm	1000mm	65mm
D8170/1000/25/PSS	9458176654302	D8170/1000/25 OA 1025 CTC 1000 PSS	25mm	1019mm	1000mm	70mm
D8170/1000/25/SSS	9458176654301	D8170/1000/25 OA 1025 CTC 1000 SSS	25mm	1019mm	1000mm	70mm
D8170/1000/32/PSS	9458176655302	D8170/1000/32 OA 1032 CTC 1000 PSS	32mm	1019mm	1000mm	77mm
D8170/1000/32/SSS	9458176655301	D8170/1000/32 OA 1032 CTC 1000 SSS	32mm	1019mm	1000mm	77mm
D8170/1500/19/PSS	9458178393302	D8170/1500/19 OA 1519 CTC 1500 PSS	19mm	1519mm	1500mm	65mm
D8170/1500/19/SSS	9458178393301	D8170/1500/19 OA 1519 CTC 1500 SSS	19mm	1519mm	1500mm	65mm
D8170/1500/25/PSS	9458178394302	D8170/1500/25 OA 1525 CTC 1500 PSS	25mm	1519mm	1500mm	70mm
D8170/1500/25/SSS	9458178394301	D8170/1500/25 OA 1525 CTC 1500 SSS	25mm	1519mm	1500mm	70mm
D8170/1500/32/PSS	9458178395302	D8170/1500/32 OA 1532 CTC 1500 PSS	32mm	1519mm	1500mm	77mm
D8170/1500/32/SSS	9458178395301	D8170/1500/32 OA 1532 CTC 1500 SSS	32mm	1519mm	1500mm	77mm
ACCESSORIES - DISC FIXINGS - sold as a pair						
DF19/M8/75 PSS	9459751988102	19MM DISK FIX PAIR M8 X 75MM PSS				
DF19/M8/75 SSS	9459751988101	19MM DISK FIX PAIR M8 X 75MM SSS				
DF25/M8/75 PSS	9459752588102	25MM DISK FIX PAIR M8 X 75MM PSS				
DF25/M8/75 SSS	9400000014108	25MM DISK FIX PAIR M8 X 75MM SSS				
DF32/M8/75 PSS	9459753288102	32MM DISK FIX PAIR M8 X 75MM PSS				
DF32/M8/75 SSS	9400000014109	32MM DISK FIX PAIR M8 X 75MM SSS				

Ordering details

Item	Article Number	Description	Square Tube	Length	Fixing Centers	Projection
ACCESSORIES - GLASS FIXINGS - sold as a pair						
GDF/19/M8/50 PSS	9459501988102	19MM GLASS DISK FIX PAIR PSS M8 X 50MM				
GDF/19/M8/50 SSS	9459501988101	19MM GLASS DISK FIX PAIR SSS M8 X 50MM				
GDF25/M8/50 PSS	9459502588102	25MM GLASS DISK FIX PSS PAIR M8 X 50MM				
GDF25/M8/50 SSS	9459502588101	25MM GLASS DISK FIX SSS PAIR M8 X 50MM				
GDF32/M8/50 PSS	9459503288102	32MM GLASS DISK FIX PSS PAIR M8 X 50MM				
GDF32/M8/50 SSS	9459503288101	32MM GLASS DISK FIX SSS PAIR M8 X 50MM				